MIDDLE EAST FUJI ENGINEERING (MEFE)

QUALITY • RELIABILITY • INTEGRITY

Middle East Fuji Engineering

- Provides 24x7 engineering services for ships Afloat as well as in the Dock, for shore-based industry.
- Supplies Genuine Machinery spares.
- Supplies Deck Machinery & Fittings, Classified /Overboard valves & Out Fittings, Retrofit Equipment, High pressure/ High and low temperature valves, fittings and consumables.
- Experience and training include

a. Mechanical Engineering

b. Automation / Electrical Engineering

c. Safety Equipment Inspection

- Serving all Middle East ports, Africa and Central Asia, Around the Globe

MEFE's Major Customers

- NYK LNG SHIPMANAGEMENT LTD.
- MOL LNG TRANSPORT CO., LTD.
- "K" LINE SHIP MANAGEMENT CO., LTD.
- TEEKAY SHIPPING LIMITED
- KNUTSEN OAS SHIPPING
- MARAN GAS MARITIME INC
- ADNATCO - NGSCO (LNG FLEET DIVISION)
- EXMAR SHIPMANAGEMENT
- OMAN SHIP MANAGEMENT COMPANY S.A.O.C.
- THE SHIPPING CORPORATION OF INDIA LTD
- WILHELMSEN SHIP MANAGEMENT
- WAH KWONG SHIP MANAGEMENT
- V.SHIPS SHIP MANAGEMENT LTD.
- TORM SHIPPING INDIA PVT LTD.
- TNKC UK LIMITED
- SHELL INTERNATIONAL

- NORTHERN MARINE MANAGEMENT LIMITED
- BP SHIPPING LTD.
- OSM SHIP MANAGEMENT AS
- MALAYSIA INTERNATIONAL SHIPPING CORPORATION BERHAD
- THE GREAT EASTERN SHIPPING CO., LTD.
- THOME SHIP MANAGEMENT PTE. LTD.
- STOLT TANKERS B.V.
- SAUDI ARABIAN SAIPEM CO. LTD.
- SAMOS STEAMSHIP CO.
- PRONAV SHIP MANAGEMENT GMBH & CO. KG
- OMAN DRYDOCK COMPANY, S.A.O.C.
- NATIONAL IRANIAN TANKER CO. (SHJ)
- NAKILAT-KEPPEL OFFSHORE AND MARINE LTD.
- MIDEAST SHIP MANAGEMENT LTD.

- KUWAIT OIL TANKER CO., S.A.K.
- DRYDOCKS WORLD - DUBAI
- ARAB SHIPBUILDING AND REPAIR YARD CO
- ANGLO-EASTERN SHIP MANAGEMENT LIMITED
- SYNERGY MARITIME PVT LTD
- CHINA LNG SHIPPING (INTERNATIONAL) CO..
- YUYO STEAMSHIP CO., LTD.
- WORLD TANKERS MANAGEMENT PTE LTD
- UNIX LINE PTE LTD
- THORESEN & CO., (BANGKOK) LIMITED
- SAIPEM S.P.A
- MMS CO., LTD.

WORK SCOPE - Mechanical

DIESEL ENGINE

Akasaka Diesels Ltd., Marine Diesel Engines (UEC), Makita Corporation, Marine Diesel Engine (B&W)

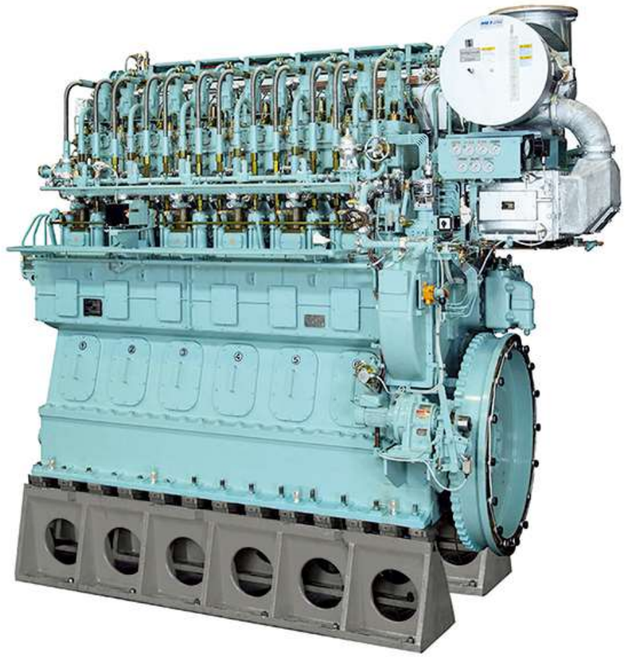

PUMPS & TURBINES

Overhauling of Cargo, Ballast, Tank Cleaning, Stripping, Feed, Circulating, Vacuum Pumps, Steam Turbines, Turbo Generators, AUS (Automatic Unloading Systems) etc.

VALVE & VALVE CONTROL SYSTEM

Overhauling of Cryogenic Safety Relief Valve, Boiler / Steam High Pressure Safety Valve, Cargo & Ballast & Boiler Steam valves and Control Systems. Cryogenic Valves for LNG/LPG applications, Pressure / Vacuum Valves

BOILER

Miura Co. Ltd., Marine Boilers & Incinerators, Volcano Co. Ltd., Incinerators, Burner Management System

HYDRAULIC EQUIPMENT

Hydraulic Winches, Windlass, Steering Gear MHI (Together with Samayu Eng. Japan), Fukushima (Together with Maker) – Miura Co. Ltd., Marine Boilers & Incinerators, Volcano Co. Ltd., Incinerators, Burner Management System

HYDRAULIC EQUIPMENT
Automation/Electrical Engineering

- Cargo, Ballast, Service tank level gauging equipment, Draft Gauge, Pressure & Temp. Indication system, Cargo and Ballast VRCS, ODM (Oil Discharge Monitoring and Control System),Bilge Separators (Oil-water separator)

- Main Switchboard/ Emergency Switchboard, Starter Panels , Alarm & Monitoring System

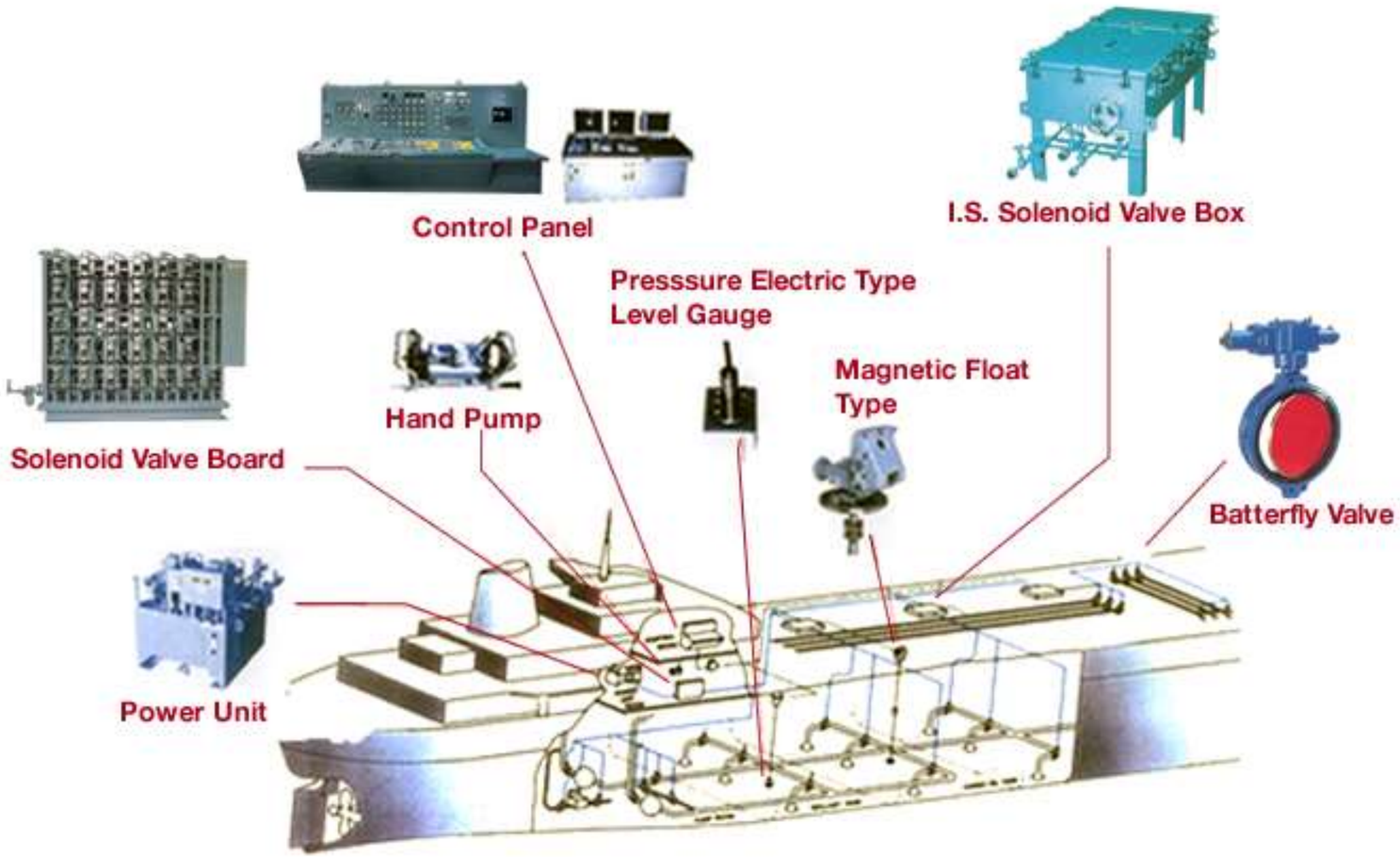

Automation/Electrical Engineering

- Gas Detection System, Gas Detection Instruments, IG System, Alcohol Test Kit
- N2 Generator, IG Generator, Fire Fighting (Extinguishing) System.
- Automation/Electrical Engineering
- Thruster Remote Control System
- Propeller Shaft RPM Indicator
- Engine Telegraph, Main Engine Remote Control System
- Moriya Marine Elevators

a. Inverter Renewal – FRENIC-VG Fuji Electric.

b. PLC renewal – MHI Q-series

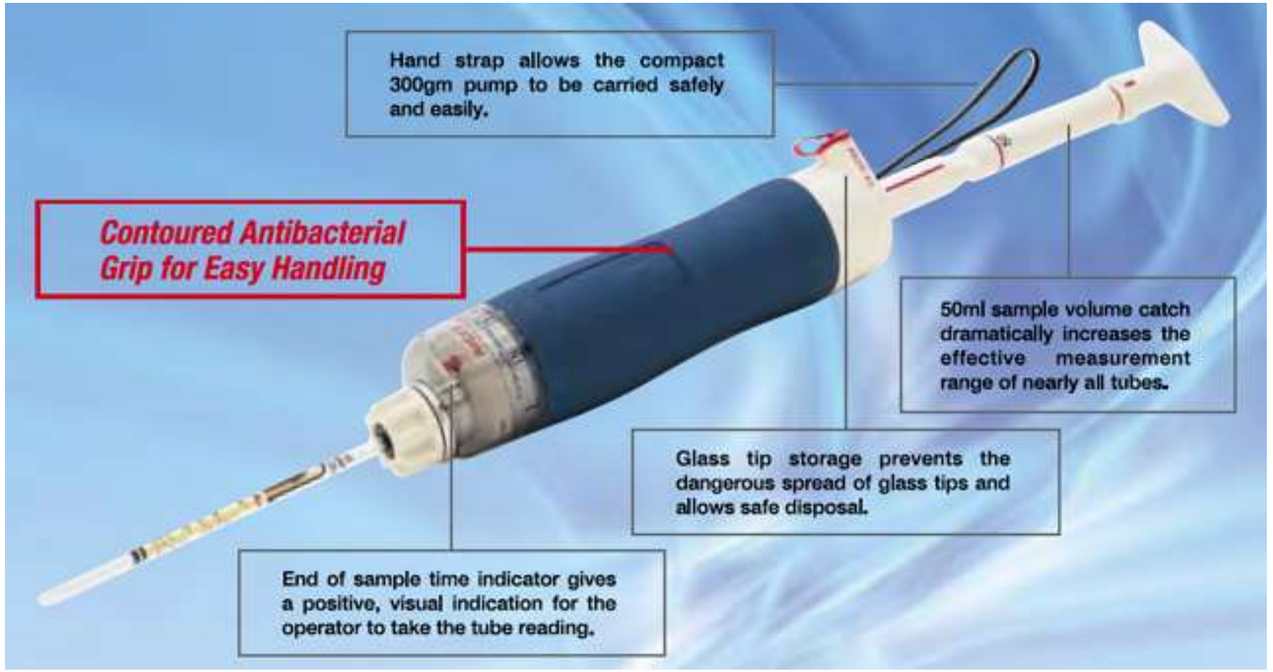

Safety Equipment Inspection

- Annual / Five Yearly inspection of Lifeboats, Hook release & Launching Devices as per MSC1/CIRC1206
- Authorized service agents for 6 manufacturers and provide annual / 5-year inspection services and LRRS modification and kit supply
- Immersion Suits - Provides inspection service for Immersion suits
- Fire Fighting (Extinguishing) System - provide inspection service for Fire Fighting (Extinguishing) Systems

Machinery, Equipment & Spare Parts Trading

- Genuine Spare parts and Equipment from Manufacturers around the globe.
- Supply Equipment for New Building, Retrofit/ Replacement Equipment for Conversion & Repair Ships. Emergency Repair & supply services.
- Maker/Equipment List, Reference List Available

Machinery, Equipment Service Scope

- Oil & Product Tanker Vessels.
- LNG Vessel
- LPG Vessels.

Various Special Equipment And Fittings For Tankers

■ 仕 様

MODEL	N-NHV-(MATERIAL)-(SIZE)
SIZE	65A/80A/100A/125A/150A/200A Connection JIS-5K
MATERIAL	SCS14(65A,80A) FC200(80A,100A,125A,150A,200A)
SET PRESSURE	14kPa 20kPa
APPROVED	IMO MSC/circ.677 circ.1009 ISO 15364

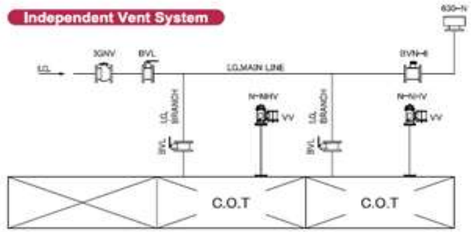

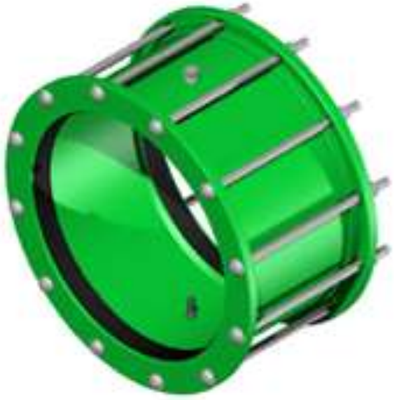

Anchor & Chain

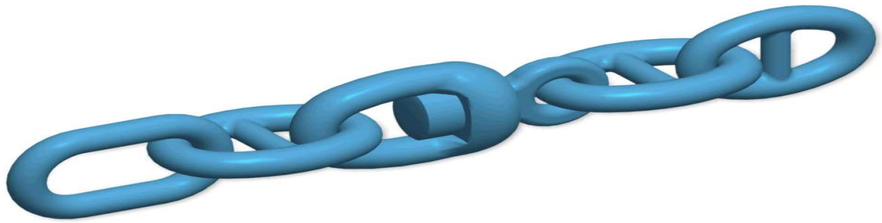

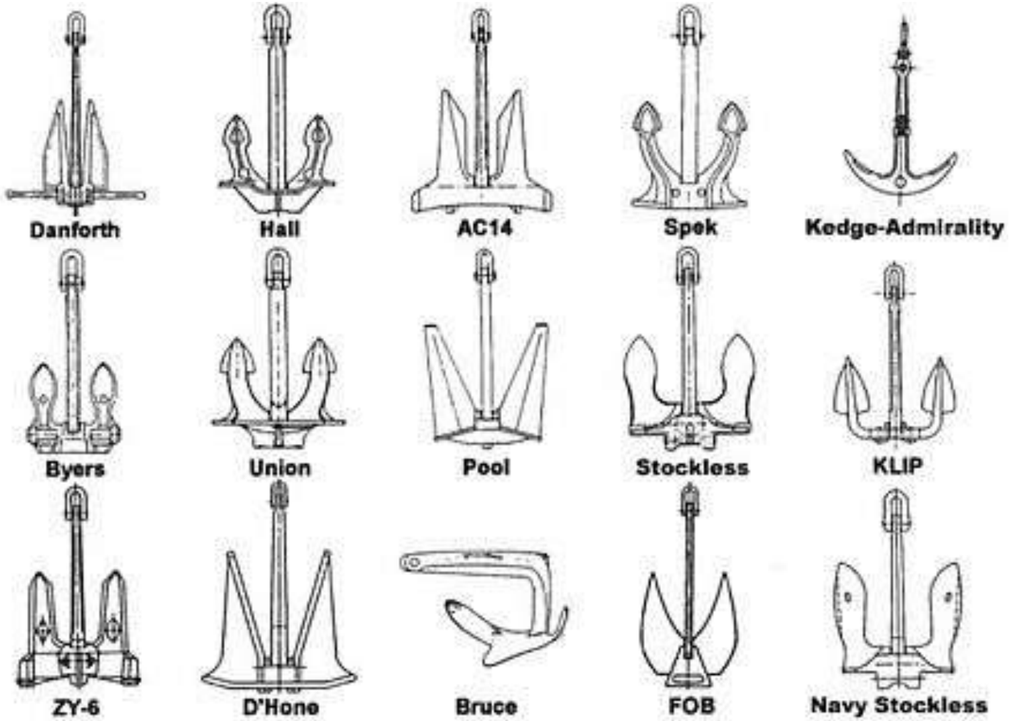

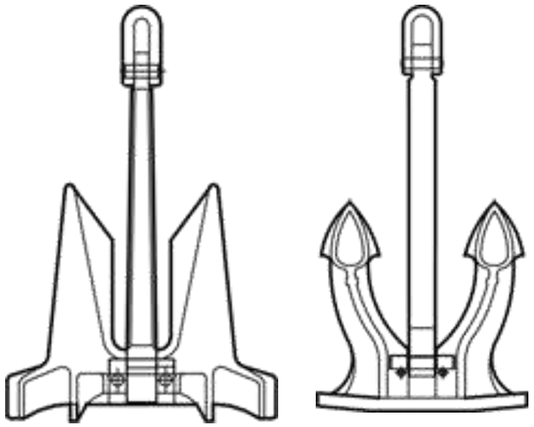

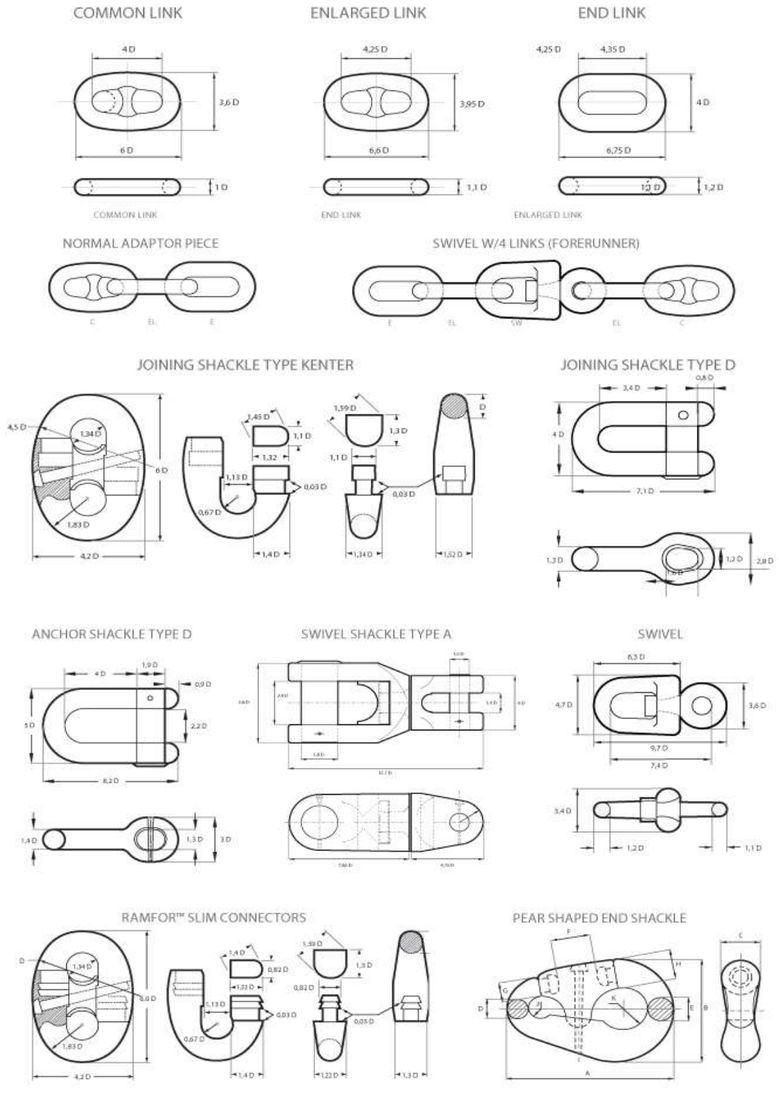

Agents and/or after sales service representatives for

AKASAKA
The Power to Advance
Akasaka Diesels Limited

FUKUI

Fukushima

Kashiwa Co., Ltd.

makita

MANSEI INC.
High Quality, Reliability and Excellent Functions

明陽電機株式会社
MEIYO ELECTRIC Co.,Ltd.

OSAV

MITSUBISHI
HEAVY INDUSTRIES, LTD.

MIURA
Miura Machine Co.,Ltd.

MIURA
MIURA PROTEC CO.,LTD.

Kosaka Laboratory Ltd.

NIPPON PUSNES CO., LTD.

NISHI-F CO., LTD.

SHINKO

Shigi

NIIKURA KOGYO

Volcano

(Only Middle East Region)

TEIKOKU
MACHINERY WORKS,LTD.

Takashina
Saving Life On Earth
since 1935

SEKIGAHARA SEISAKUSHO

TAIKO KIKAI INDUSTRIES CO., LTD.

THANK YOU!

For more information, Visit our website

www.mef.ae & www.fujitrading.co.jp